* All images in this datasheet are for illustrative purposes only and may differ from the actual product

LG Business Solutions





Pro:Centric Set Top Box STB-6500 (NA)

Enjoy Seamless and Smart TV with Pro:Centric Set Top Box

EAN:
8806091098856

- Pro:Centric SMART IPTV Platform
- IP Streaming and RF Tuning
- UHD/4K and FHD (up to 1080) Output Resolution
- Pro:Centric Application for Non-Pro:Centric
- Embedded Pro:Idiom Decryption
- Smart Connectivity

PRO:CENTRIC HOTEL MANAGEMENT SOLUTION



Pro:Centric Smart Application Platform

Pro:Centric SMART is optimized for customizing hospitality services for hotel brands and guests through an IP & RF infrastructure. With LG's smart customization tools and content management software, it increases convenience through implementation of high-end technology.

* Actual UI may differ

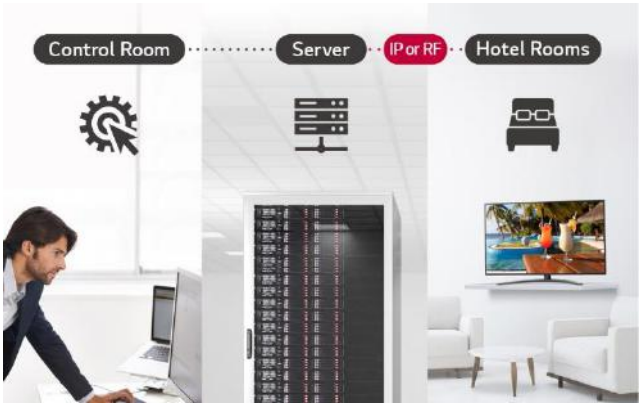

Pro:Centric Direct

The hotel content management solution Pro:Centric Direct offers easy and simple editing tools, making it easy to perform service and IP network-based remote management. The Pro:Centric Direct solution enables users to edit their interface easily by providing customized interface and efficiently manages the TVs in the rooms. The current PCD version provides IoT-based in-room control as well as voice control function through LG Natural Language Processing (NLP). These IoT and voice-related functions will be your starting point to prepare for the hotel rooms of next generation through artificial intelligence.

* Some devices may have limited compatibility, thus may not support IoT function.

SUPERB PICTURE QUALITY



Support Ultra HD Resolution

STB-6500 supports 4 types of video decoding and output resolutions which are UHD, FHD, HD and 1,366 × 768px. Also, it automatically upscales Full HD content on the HDMI/USB inputs to Ultra HD.* With this, you can deliver clear messages and add animation on the content.

* The output resolution should be selected 2160p, and the display panel's native video resolution should support Ultra HD.

SMART PLATFORM



More Innovative LG webOS 5.0

Explore the latest LG Smart TV features. Newly added Gallery mode enables you to utilize the TV as an artwork which harmonizes with your space and life.

SMART DRM



Embedded Pro:Idiom Decryption

STB-6500 provides embedded Pro:Idiom decryption for non-Pro:Idiom TVs. Pro:Idiom, DRM (Digital Right Management) technology unlocks access to premium content to help assure rapid and broad deployment of HDTV and other high value digital contents.

HARDWARE DESIGN



Enclosure Design with an Expansion Side-connector

STB-6500 is designed for additional 3rd party external module expansion to deliver additional capabilities such as DOCSIS 3.0 cable modem card for IP-over-coax installation. This reduces the necessity of cables and connectors, and provides easier installation and management.

* The external modules must be tested for compatibility with STB-6500.

SMART CONNECTIVITY



SmartShare

SmartShare allows users to share content more easily and quickly across various devices. It also simplifies the process by easily searching for the desired content and share content.

* The devices must be DLNA certified to support this feature.



Bluetooth Sound Sync

Bluetooth Sound Sync enables users to listen to music on a mobile device through TV speakers via Bluetooth connection.

* Support devices for Bluetooth Sound Sync : Android (above v4.4 KitKat), iOS based mobile device.



SoftAP

Software-enabled Access Point (Soft AP) functions as WiFi that uses TV as a wireless hotspot, enabling guests to connect their own devices to the Soft AP.

* SoftAP should be set in installation menu after TV is on.
* Smart Mirroring may not be operated at the same time.

SPECIFICATIONS

		STB-6500
Category	Category	Set Top Box
Video	Output Resolution	UHD / FHD / HD / 1,366 × 768
Audio	LG Sound Sync	Yes (Required Bluetooth)
Broadcasting System	Digital (Terrestrial, Cable, Satellite)	ATSC (Clear QAM)
	Analog (NTSC / SECAM / PAL)	NTSC
Hospitality Solution	Solution Type	Pro:Centric (Smart, Direct, V), Quick Menu 4.0
	Server	PCS400R
	DRM	Pro:Idiom (S / W Type), Pro:Idiom Media
Smart Feature	webOS 5.0, Gallery Mode, Web Browser, Pre-loaded App, Magic Remote Compatibility (Ready, MR18HA), Soft AP, Wi-Fi (802.11ac), Screen Share (Miracast), Smart Share, Bluetooth Audio Playback, LG Sound Sync / Bluetooth, Voice Recognition (with Magic Remote), IoT, USB Cloning, SI Compatible (MPI, RS232C), IR Out (MPI, RS232C)	
Hospitality Feature	Installer Menu, One Channel Map (Logical Channel Management), External Speaker Out (Int Variable / Fixed, 3.5mm, Stereo, Line-Out, Typ. 400mVrms ± 100mVrms @10KΩ), Instant ON	
Jack Interface	Upper Side	External MPI Control (RJ12 Jack), MPI/MTI Television Control (RJ12 Jack), HDMI 2.0 (2, HDCP 2,2), USB 2.0 (2)
	Lower Rear	Power, HDMI Out (2.0, HDCP 2,3), Digital Audio Out (Optical), External Speaker Out (Line Out), AV In (Phone Jack Type), External IR (Phone Jack Type), RS-232C Display (Phone Jack Type), RS-232C Ext. Device (Phone Jack Type), Debug, RF In, RJ45
	Right Side	60 pin interface
Dimension	W × H × D / Weight	233 × 180.5 × 29.8 mm / 0.72 kg
	W × H × D / Weight (Shipping)	366 × 143 × 218 mm / 1.85 kg
Power	Power Supply (Voltage, Hz)	AC 120 V ~ 50/60 Hz
	Power Consumption (Max.)	60 W
	Power Consumption (Typ.)	STB only : 14.1 W STB + Expansion Module : 44 W
	Standby Power Consumption	1.5 W Under
Standard Approval	Safety	UL
	EMC	FCC

* Specifications are subject to change without notice. Please make sure to check the product manual for details about product usage.

LG may make changes to specifications and product descriptions without notice.
Copyright © 2020 LG Electronics Inc. All rights reserved. "LG Life's Good" is a registered trademark of LG Corp. The names of products and brands mentioned here may be the trademarks of their respective owners.

LG Business Solutions

PRODUCT INFORMATION



STB-6500 (NA)

Type	Smart
Data Streaming (IP&RF)	Yes
Pro:Centric Application	PCA 3.8
Tuner	1 Tuner
HCAP (SDK)	GEM / HTML5

DIMENSION

(unit: mm)

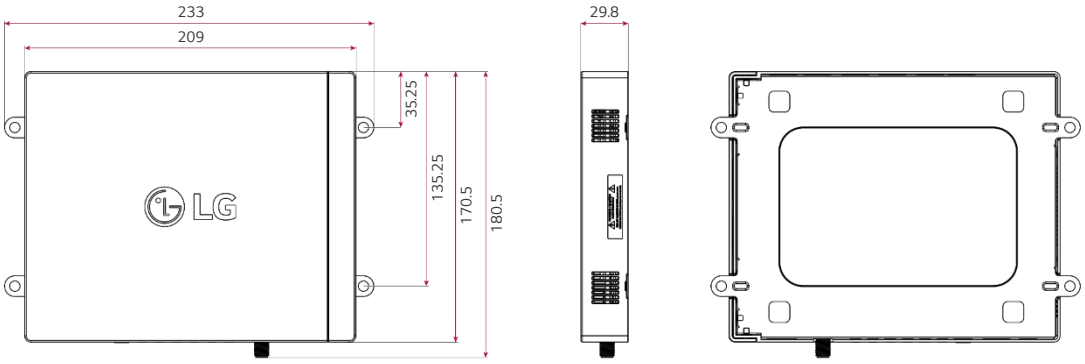

CONNECTIVITY

SYSTEM CONTROLLER

Front

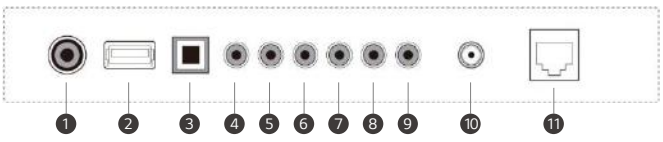

Rear

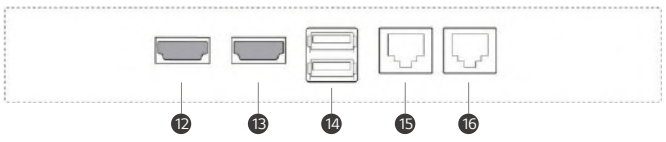

1. POWER
2. HDMI OUT
3. OPTICAL DIGITAL AUDIO OUT
4. EXTERNAL RS-232C CONTROL
5. AUDIO LINE OUT
6. AV IN
7. EXTERNAL IR IN
8. RS-232C TELEVISION CONTROL
9. SERVICE
10. ANTENNA / CABLE IN
11. LAN
12. HDMI 1
13. HDMI 2
14. USB IN 1 / USB IN 2
15. MPI / MTI TELEVISION CONTROL
16. EXTERNAL MPI CONTROL

* Dimensions & Jack Panels may differ from the above image, so please contact LG sales team to verify before ordering.